STREET CLOSURE, LOCAL DEAD END STREET

WORK SITE ADDRESS

_____

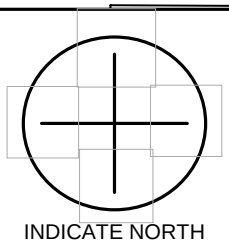

INDICATE NORTH

DRAWING NOT TO SCALE

ALL LENGTHS ARE MINIMUM DISTANCES UNLESS OTHERWISE NOTED

FOR DIMENSIONS CONSULT CITY OF SALEM "TEMPORARY TRAFFIC CONTROL SPACING TABLES"

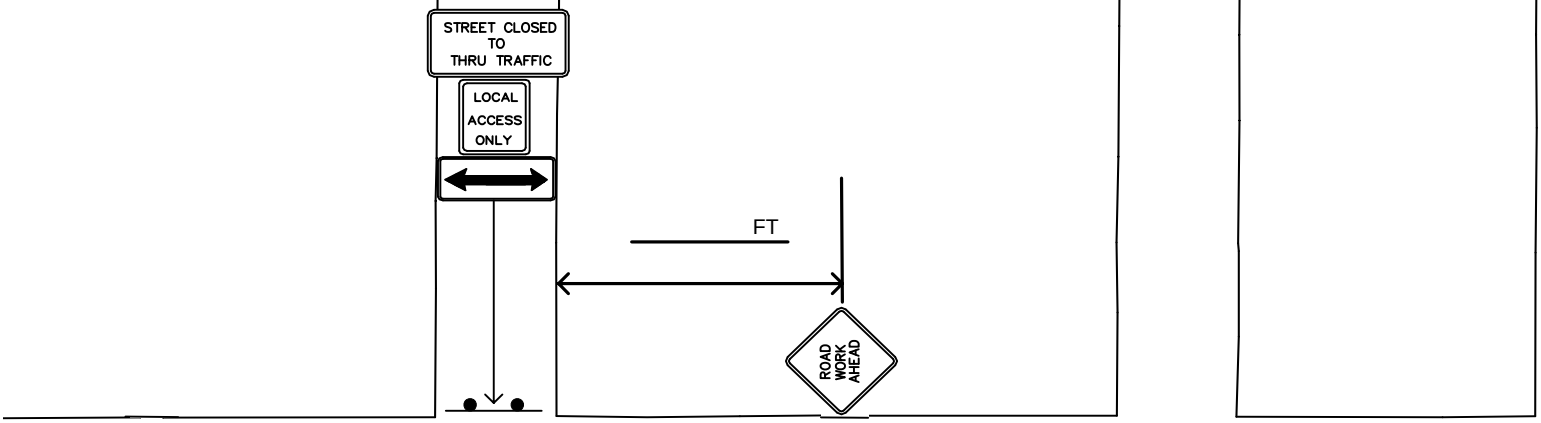

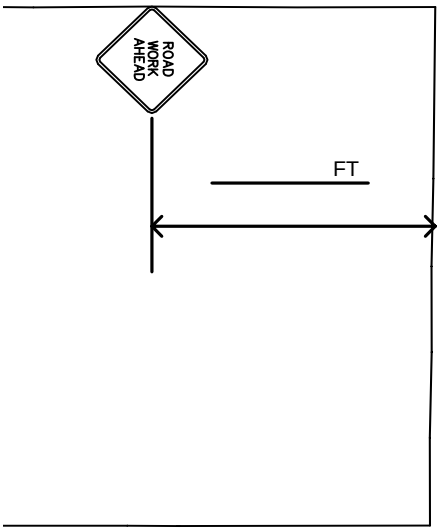

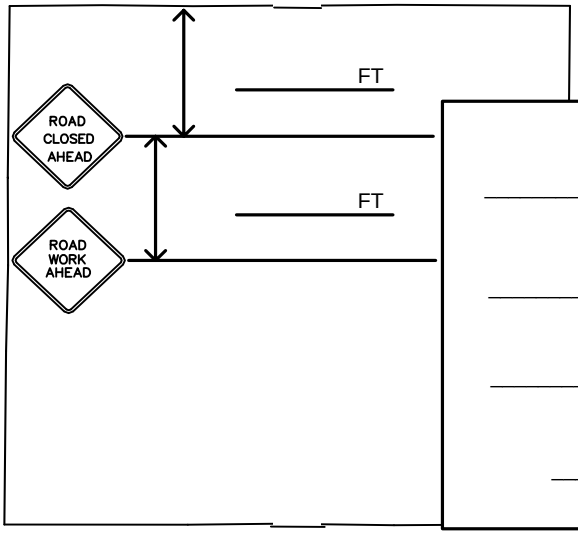

_____

STREET NAME

_____

BETWEEN

_____

AND

_____

POSTED SPEED

Sight distance shall be maintained at all public and private intersections and driveways. If sight distance is not achievable, prior approval by the City Traffic Engineer is required to either restrict turn movements or use flaggers and shall include coordination with the affected property/business owner(s).

(TCP REF)
SC-104